Mounting Frame with Tank
SLR 21

Characteristics

- mounting frame with tank
- is destined for wall hung toilets
- is destined for plasterboard constructions
- metal frame construction with surface finish
- dimensions: 510 x 1120 - 1290 x 155 - 235 mm

Dimensions

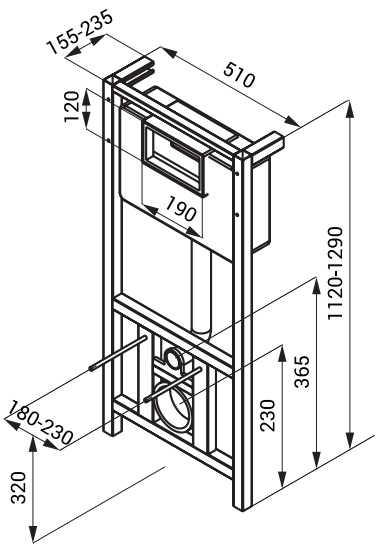

Supply Specification

SLR 21	-	**Supply No. 08210**	mounting frame, mounting set, waste outlet elbow-pipe

Recommended Accessories

SLW 50	-	**Supply No. 04500**	mechanical toilet flush button for SLR 21, white plastic
SLW 51	-	**Supply No. 04510**	mechanical toilet flush button for SLR 21, polished chrome
SLW 52	-	**Supply No. 04520**	mechanical toilet flush button for SLR 21, brusched chrome
SLW 53	-	**Supply No. 04530**	mechanical toilet flush button for SLR 21, black plastic